CCG1 35-CSP Type-C To VGA Reference Schematic

Table Of Contents

Sheet	Description
1	Table of Contents
2	CCG1/USB Billboard
3	Type-C/Power
4	DP to VGA Convertor - STDP3150/3160
5	VGA Connector

Revision History

Revision	Date	Revision Summary
*	05-20-2015	Initial Release
A	08-18-2015	Make Q4 Do Not Load to avoid VCONN source VBUS when VCONN is present and VBUS is absent

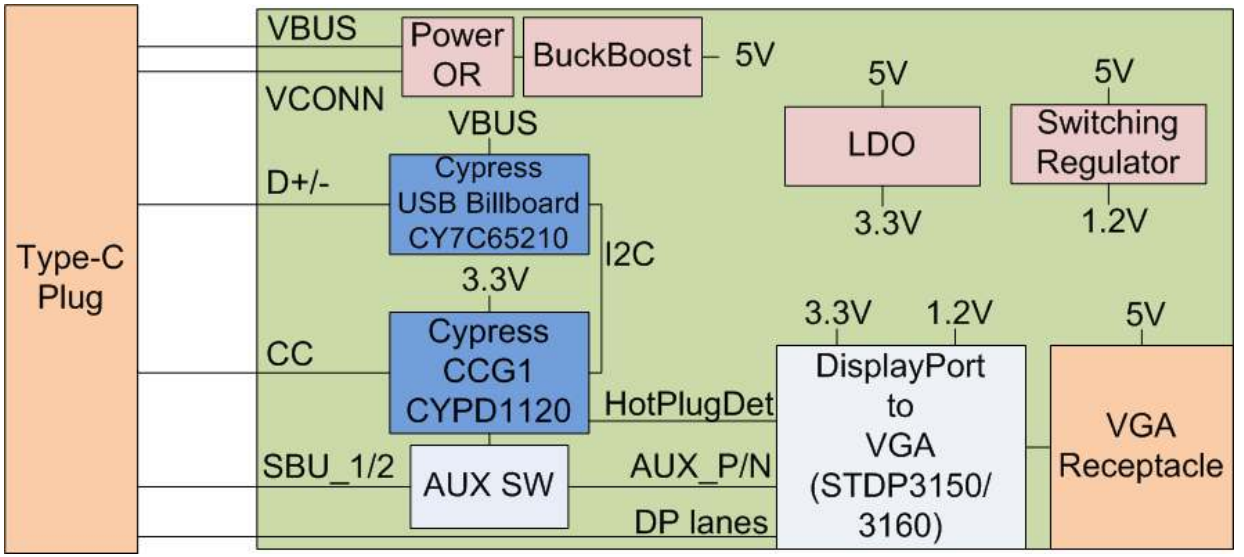

Title: CCG1 35-CSP Type-C To VGA Reference Schematic		
Size: B	Document Number: <Doc>	Rev: A
Date: Thursday, August 27, 2015	Sheet 1 of 5	

CCG1/USB-Billboard

CCG1 - Power Delivery Alternate Mode Controller

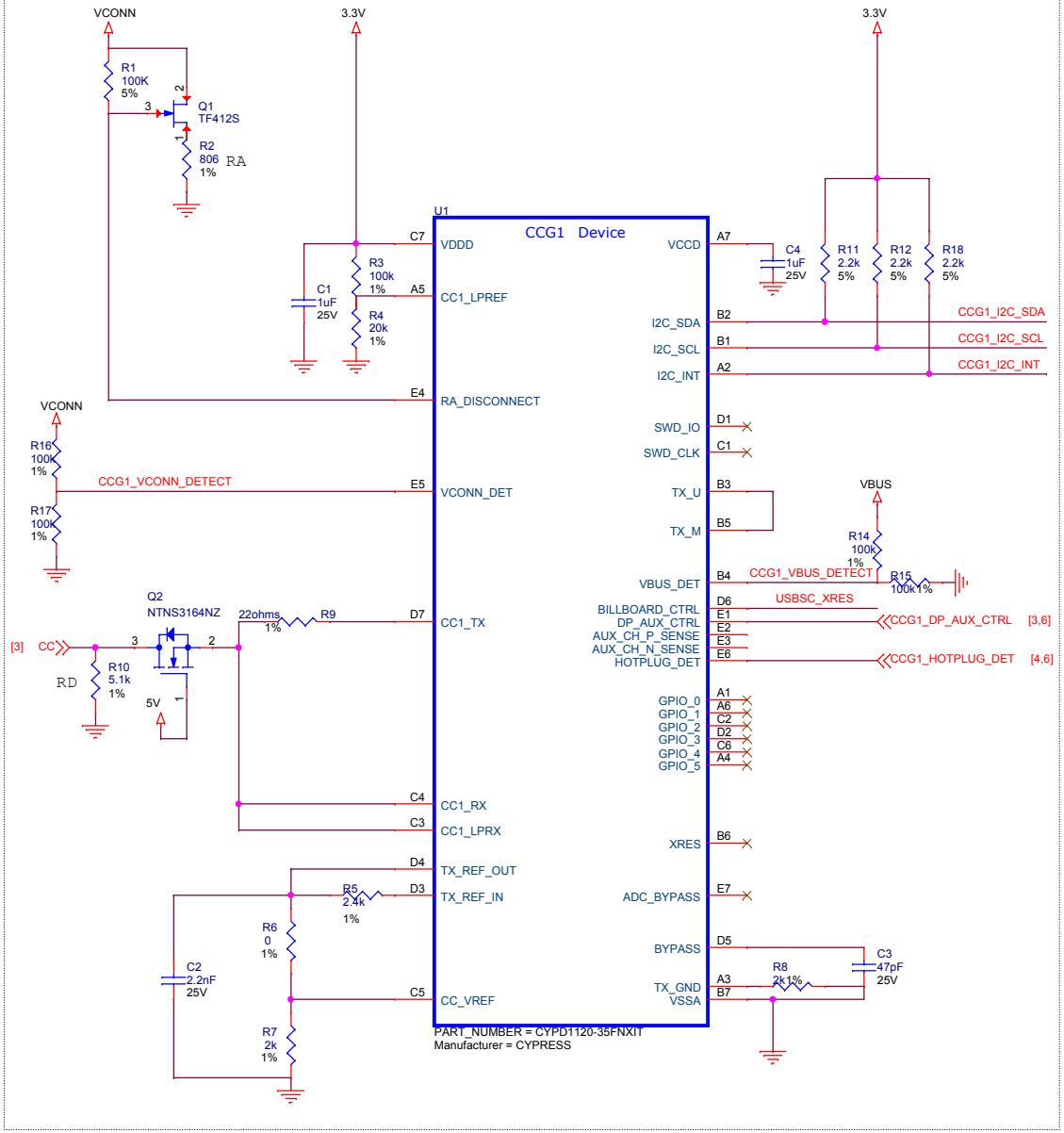

Cypress - USB Billboard

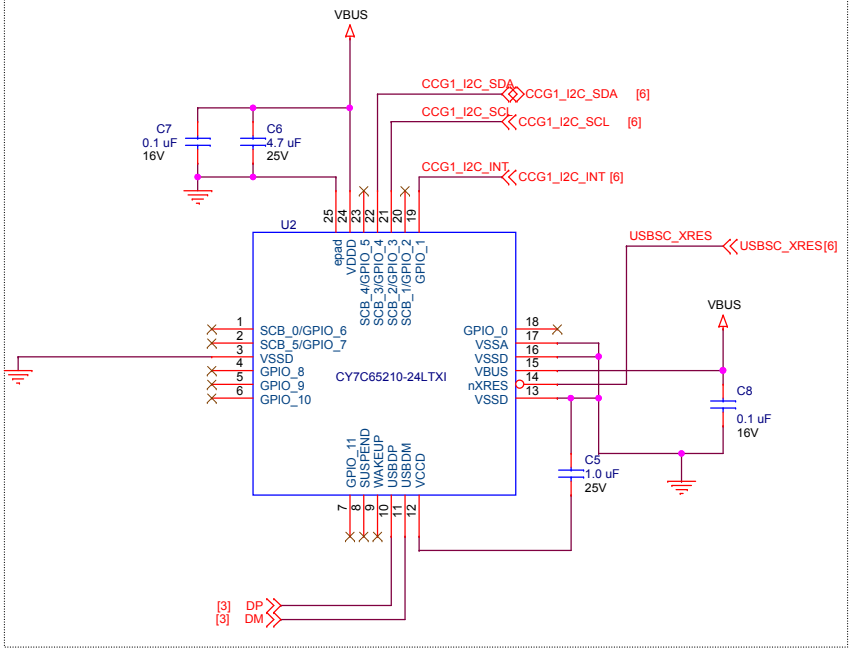

Title	CCG1 35-CSP Type-C To VGA Reference Schematic	
Size B	Document Number <Doc>	Rev A
Date: Thursday, August 27, 2015	Sheet 2 of 5	

Type-C/Power

Type-C

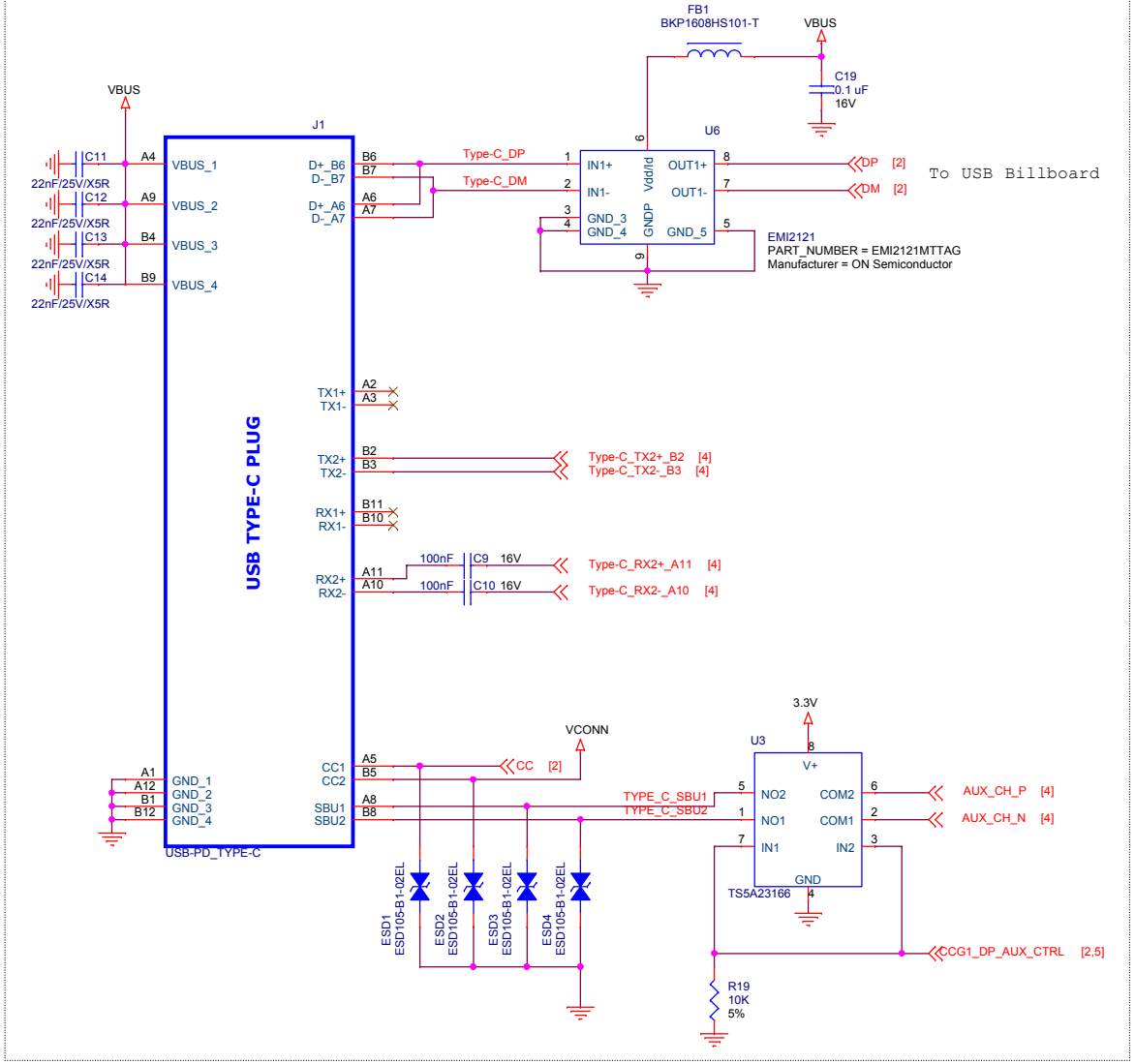

VCONN or VBUS Power Option

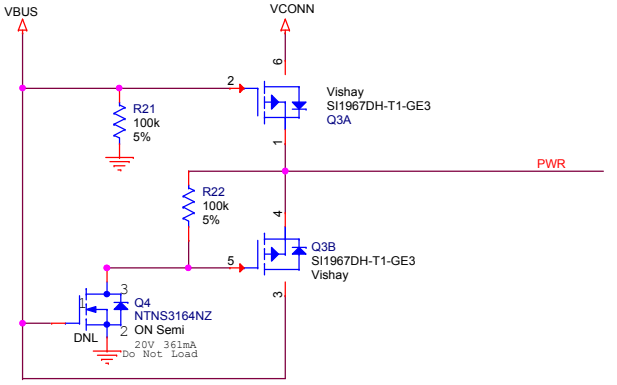

Buck Boost Regulator - 5V

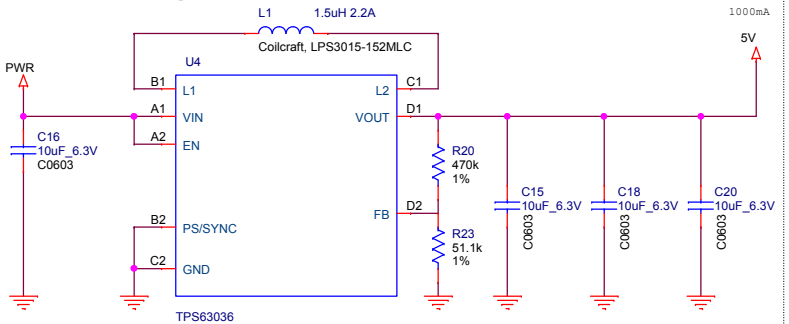

Note: Please refer to TPS63036 datasheet for layout considerations to avoid regulator stability problems and EMI problems.

LDO Regulator - 3.3V

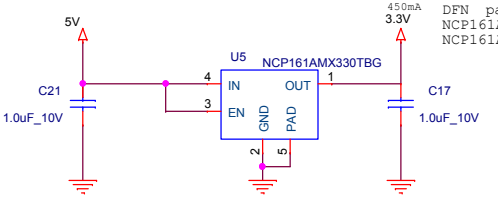

Note: NCP161 is available in CSP or DFN package
NCP161AFCT330T2G [0.65*0.65mm CSP4]
NCP161AMX330TBG [1*1mm XDFN4]

Title	CCG1 35-CSP Type-C To VGA Reference Schematic		
Size B	Document Number <Doc>		Rev A
Date: Thursday, August 27, 2015	Sheet 3 of 5		

DP to VGA Convertor - STDP3150/3160

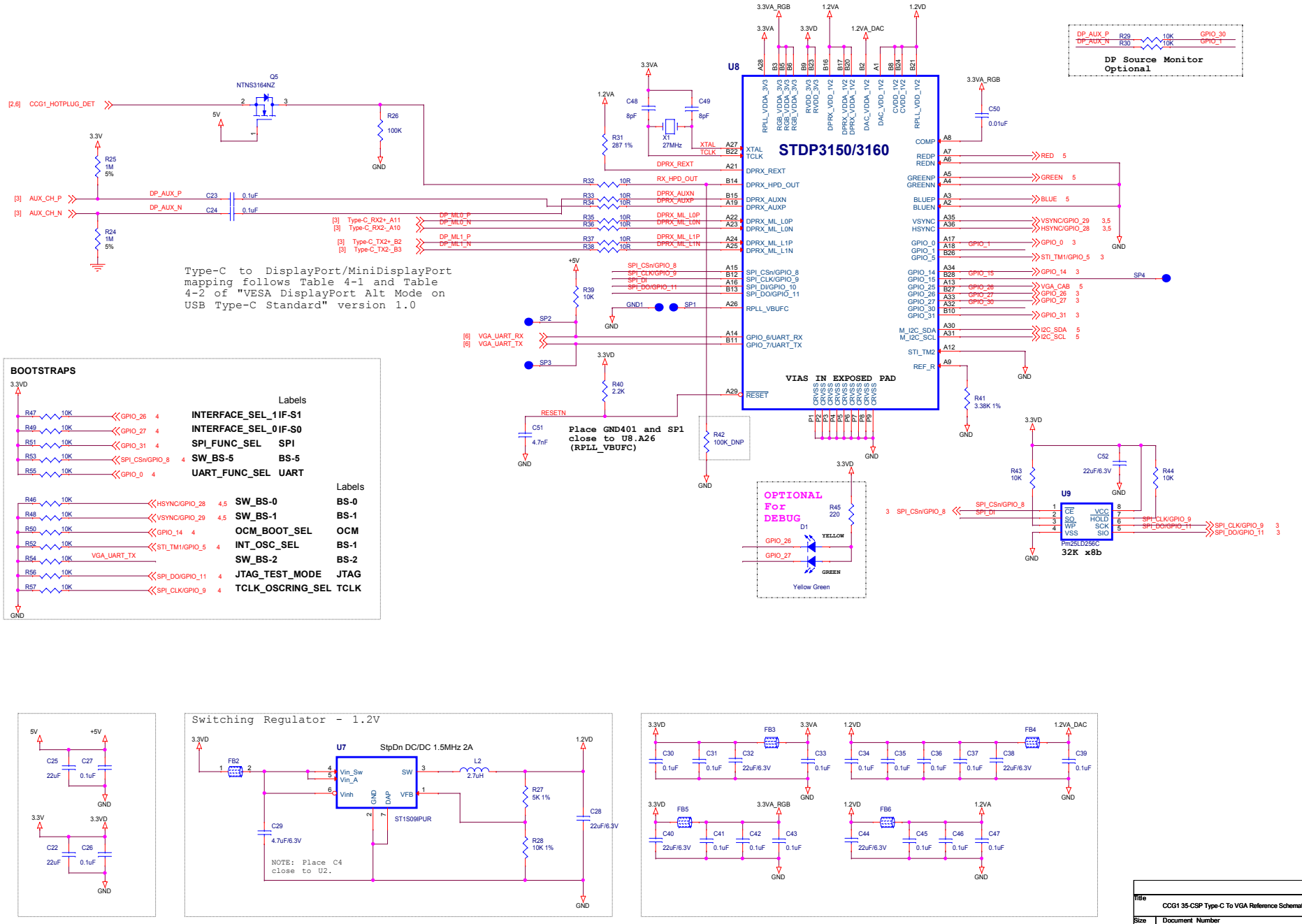

Title	CCG1 35-CSP Type-C To VGA Reference Schematic
Size C	Document Number <Doc>
Rev	A
Date:	Thursday, August 27, 2015
Sheet	4 of 5

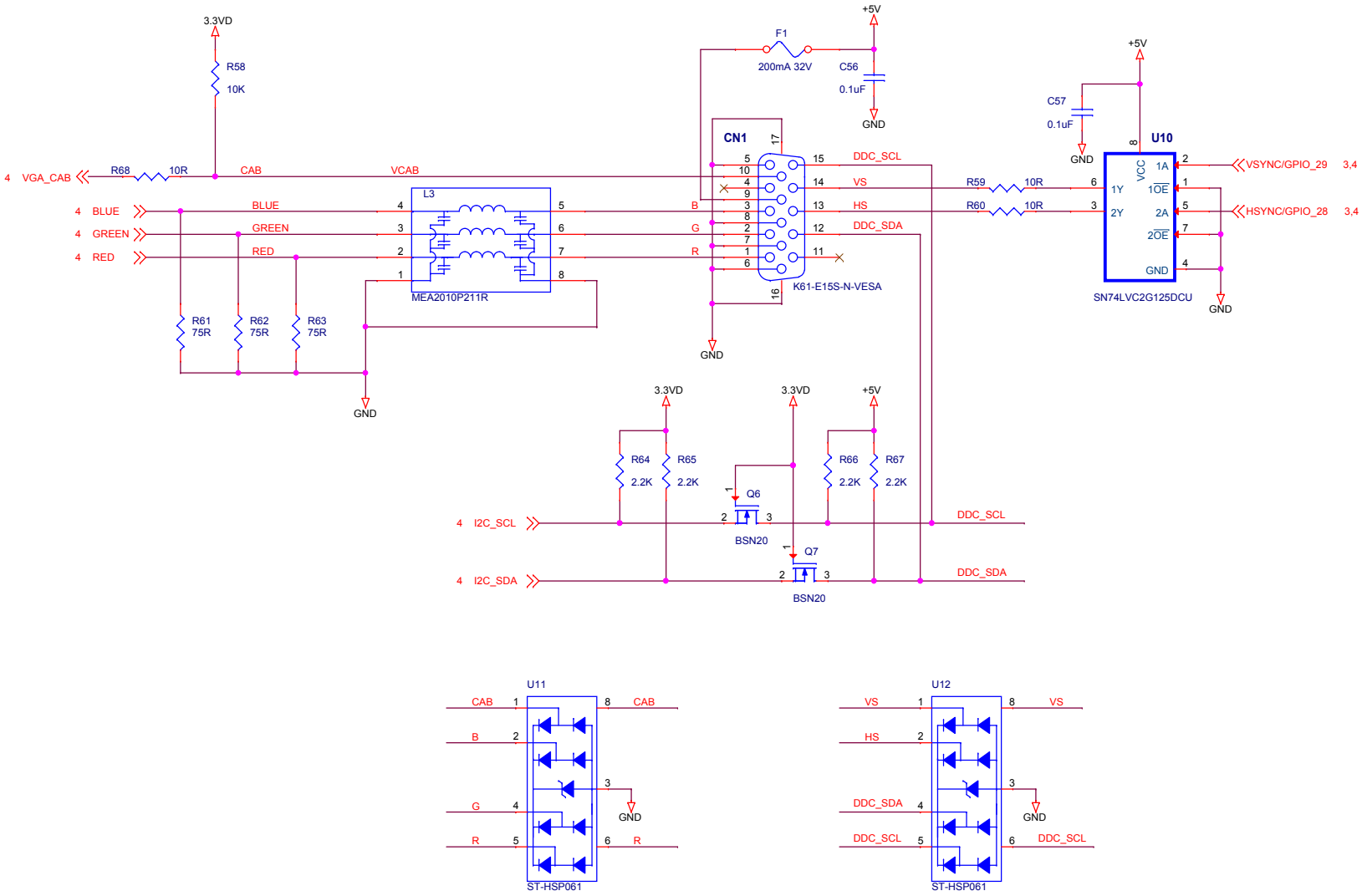

Title	CCG1 35-CSP Type-C To VGA Reference Schematic	
Size B	Document Number <Doc>	Rev A
Date: Thursday, August 27, 2015	Sheet 5 of 5	